81 SERIES PIVOT SHAFTS

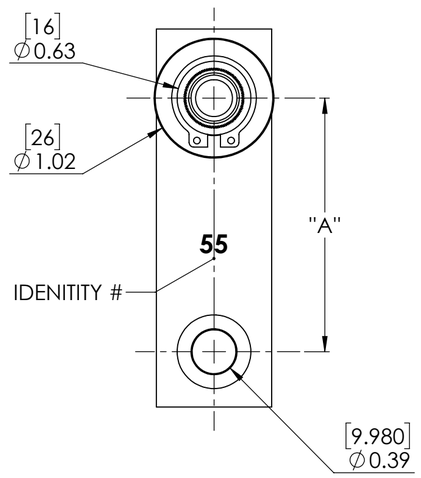

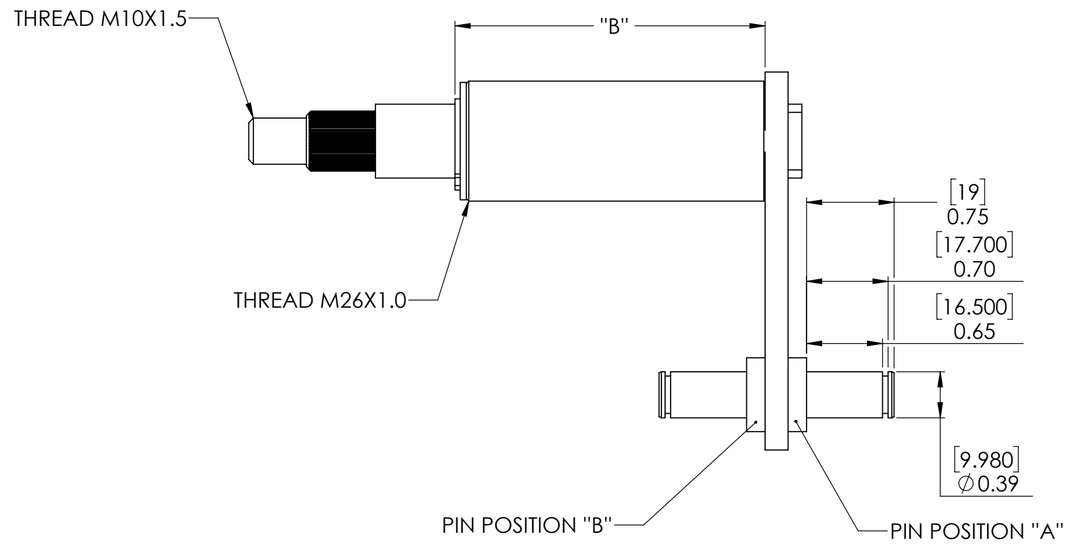

PART #	PIN POSITION	DIM. "A"	DIM "B"
PA8150	A	50MM	67.25MM
PA8150-R	B	50MM	67.25MM
PA8152	A	52MM	67.25MM
PA8152-R	B	52MM	67.25MM
PA8155	A	55MM	67.25MM
PA8155-R	B	55MM	67.25MM
PA8157	A	57MM	67.25MM
PA8157-R	B	57MM	67.25MM
PA8161.5	A	61.5MM	67.25MM

81 SERIES PIVOT SHAFTS SHIPS WITH ALL HARDWARE SHOWN

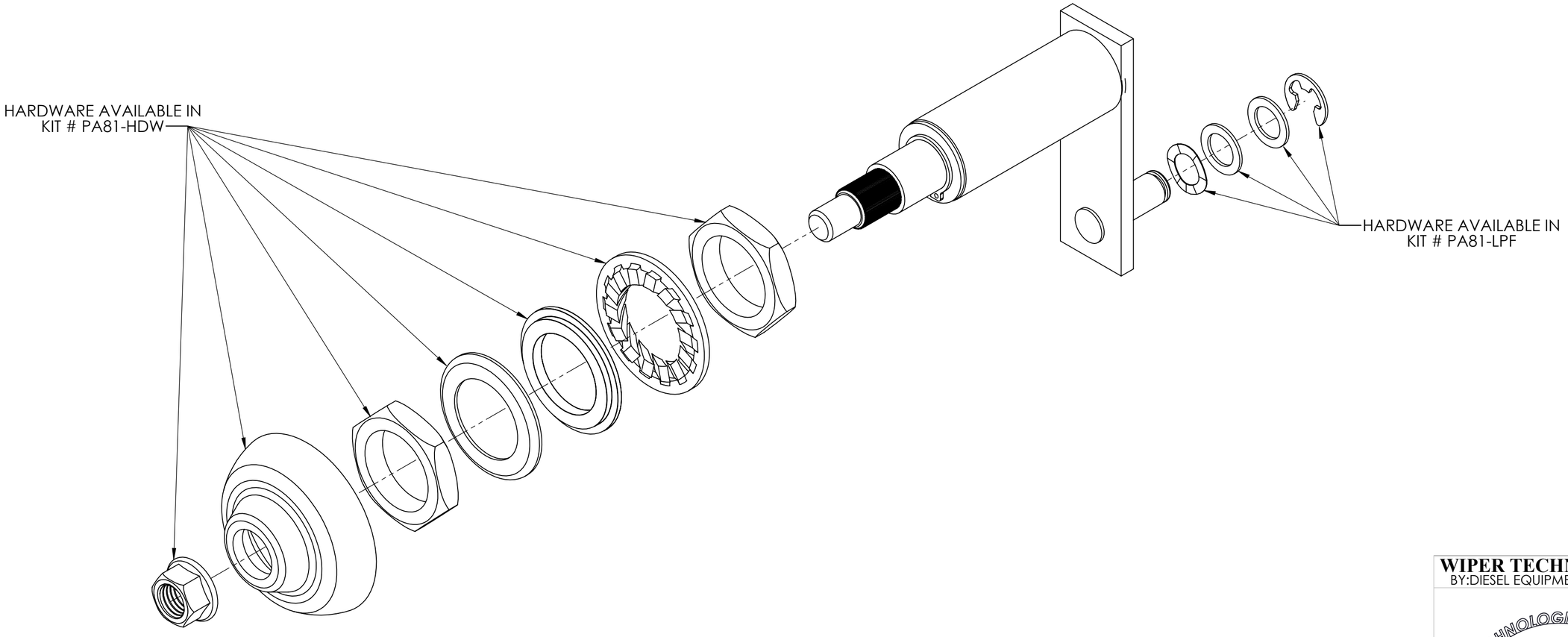

WIPER TECHNOLOGIES
BY:DIESEL EQUIPMENT COMPANY