MC60 CRANK ARM

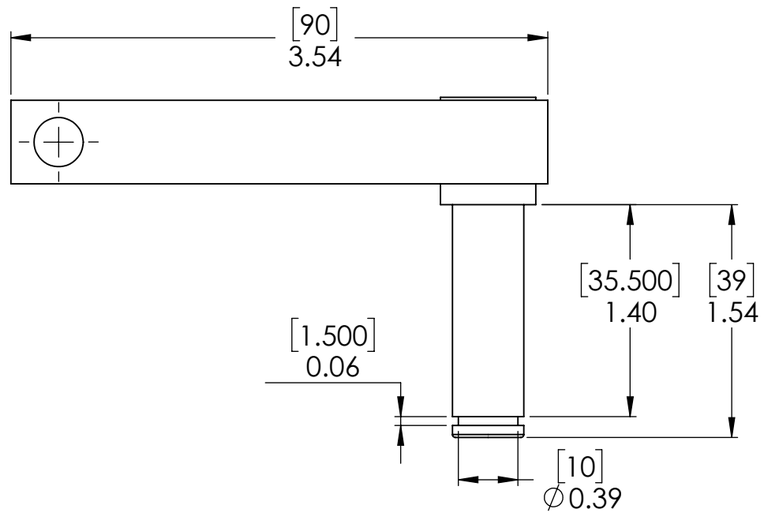

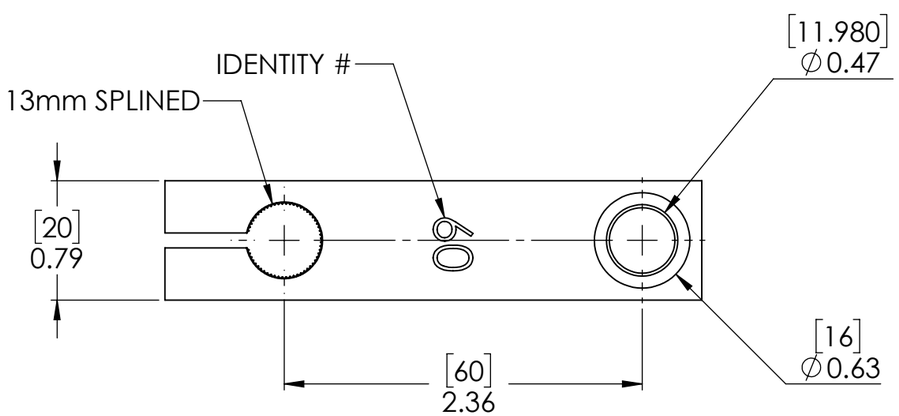

MC60 CRANK ARM SHIPS WITH ALL HARDWARE SHOWN.

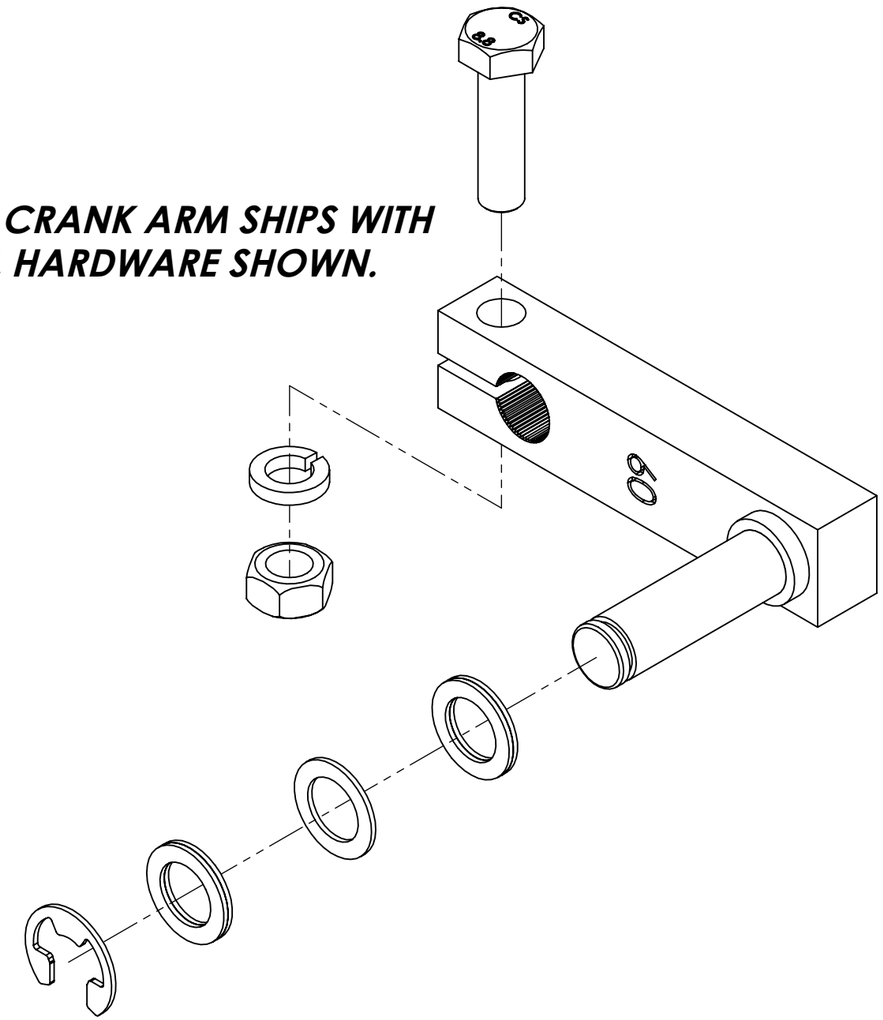

WIPER TECHNOLOGIES
BY:GLOBAL PRODUCTS LLC.